HYSYS – Electrolysis

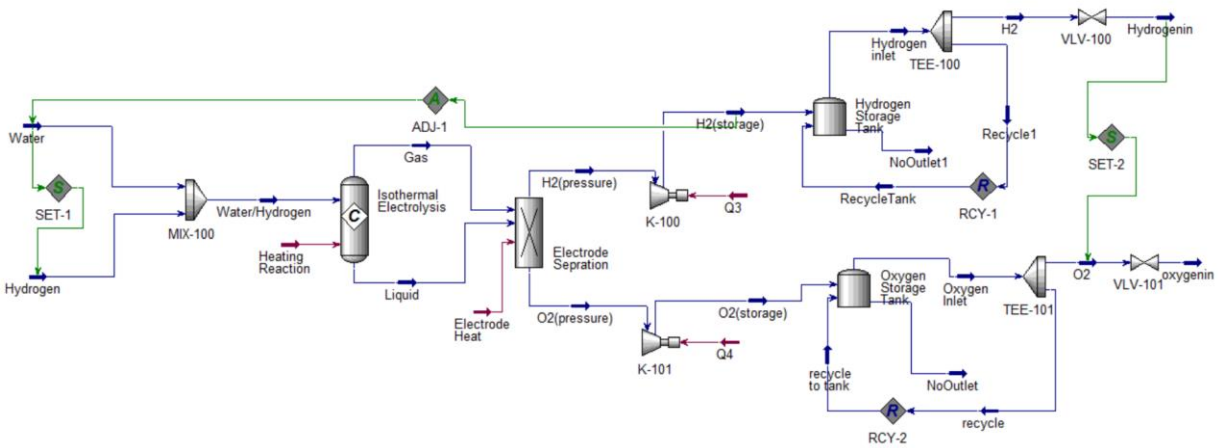

K-100		
Feed Pressure	101.3	kPa
Product Pressure	4000	kPa
Molar Flow	9.010e+004	kgmole/h
Energy	2.432e+009	kJ/h
Power	675.4	MW

K-101		
Feed Pressure	101.3	kPa
Product Pressure	6000	kPa
Molar Flow	4.055e+004	kgmole/h
Energy	1.232e+009	kJ/h
Power	342.4	MW

Energy Streams					
		Heating Reaction	Electrode Heat	Q3	Q4
Heat Flow	kJ/h	2.351e+010	-1.349e+005	2.432e+009	1.232e+009

Compositions											
	Liquid	Gas	H2(storage)	O2(storage)	Oxygen Inlet	Hydrogen inlet	NoOutlet1	Water	Hydrogen	NoOutlet	Water/Hydrogen
Comp Mole Frac (Methane)	0.0000	0.0000	0.0000	0.0000	0.0000	0.0000	0.0000	0.0000	0.0000	0.0000	0.0000
Comp Mole Frac (Oxygen)	0.3104	0.3103	0.0000	1.0000	1.0000	0.0000	0.0000	0.0000	0.0000	1.0000	0.0000
Comp Mole Frac (H2O)	0.0000	0.0000	0.0000	0.0000	0.0000	0.0000	0.0000	1.0000	0.0000	0.0000	0.9000
Comp Mole Frac (CO2)	0.0000	0.0000	0.0000	0.0000	0.0000	0.0000	0.0000	0.0000	0.0000	0.0000	0.0000
Comp Mole Frac (Nitrogen)	0.0000	0.0000	0.0000	0.0000	0.0000	0.0000	0.0000	0.0000	0.0000	0.0000	0.0000
Comp Mole Frac (NO2)	0.0000	0.0000	0.0000	0.0000	0.0000	0.0000	0.0000	0.0000	0.0000	0.0000	0.0000
Comp Mole Frac (NO)	0.0000	0.0000	0.0000	0.0000	0.0000	0.0000	0.0000	0.0000	0.0000	0.0000	0.0000
Comp Mole Frac (Ethane)	0.0000	0.0000	0.0000	0.0000	0.0000	0.0000	0.0000	0.0000	0.0000	0.0000	0.0000
Comp Mole Frac (Hydrogen)	0.6896	0.6897	1.0000	0.0000	0.0000	1.0000	1.0000	0.0000	1.0000	0.0000	0.1000

	H2(pressure)	O2(pressure)	Hydrogenin	H2	Recycle1	RecycleTank	O2	recycle	recycle to tank	oxygenin
Comp Mole Frac (Methane)	0.0000	0.0000	0.0000	0.0000	0.0000	0.0000	0.0000	0.0000	0.0000	0.0000
Comp Mole Frac (Oxygen)	0.0000	1.0000	0.0000	0.0000	0.0000	0.0000	1.0000	1.0000	1.0000	1.0000
Comp Mole Frac (H2O)	0.0000	0.0000	0.0000	0.0000	0.0000	0.0000	0.0000	0.0000	0.0000	0.0000
Comp Mole Frac (CO2)	0.0000	0.0000	0.0000	0.0000	0.0000	0.0000	0.0000	0.0000	0.0000	0.0000
Comp Mole Frac (Nitrogen)	0.0000	0.0000	0.0000	0.0000	0.0000	0.0000	0.0000	0.0000	0.0000	0.0000
Comp Mole Frac (NO2)	0.0000	0.0000	0.0000	0.0000	0.0000	0.0000	0.0000	0.0000	0.0000	0.0000
Comp Mole Frac (NO)	0.0000	0.0000	0.0000	0.0000	0.0000	0.0000	0.0000	0.0000	0.0000	0.0000
Comp Mole Frac (Ethane)	0.0000	0.0000	0.0000	0.0000	0.0000	0.0000	0.0000	0.0000	0.0000	0.0000
Comp Mole Frac (Hydrogen)	1.0000	0.0000	1.0000	1.0000	1.0000	1.0000	0.0000	0.0000	0.0000	0.0000

Material Streams												
		Liquid	Gas	H2(storage)	O2(storage)	Oxygen Inlet	Hydrogen inlet	NoOutlet1	Water	Hydrogen	NoOutlet	Water/Hydrogen
Vapour Fraction		0.0000	1.0000	1.0000	1.0000	1.0000	1.0000	0.0000	0.0000	1.0000	0.0000	0.1022
Temperature	C	100.0	100.0	999.0	1004	1004	1004	1004	20.00	20.00	1004	18.73
Pressure	kPa	101.3	101.3	4000	6000	6000	4000	4000	101.3	101.3	6000	101.3
Molar Flow	kgmole/h	0.0000	1.306e+005	9.010e+004	4.055e+004	3.166e+006	7.234e+006	0.0000	8.109e+004	9009	0.0000	9.010e+004
Mass Flow	kg/h	0.0000	1.479e+006	1.816e+005	1.297e+006	1.013e+008	1.458e+007	0.0000	1.461e+006	1.816e+004	0.0000	1.479e+006
Liquid Volume Flow	m3/h	0.0000	3741	2600	1140	8.906e+004	2.088e+005	0.0000	1464	260.0	0.0000	1724
Heat Flow	kJ/h	0.0000	2.826e+008	2.624e+009	1.322e+009	1.032e+011	2.119e+011	0.0000	-2.322e+010	-1.268e+006	0.0000	-2.322e+010
		H2(pressure)	O2(pressure)	Hydrogenin	H2	Recycle1	RecycleTank	O2	recycle	recycle to tank	oxygenin	
Vapour Fraction		1.0000	1.0000	1.0000	1.0000	1.0000	1.0000	1.0000	1.0000	1.0000	1.0000	
Temperature	C	100.0	100.0	1004	1004	1004	1004	1004	1004	1004	1005	
Pressure	kPa	101.3	101.3	4000	4000	4000	4000	6000	6000	6000	4000	
Molar Flow	kgmole/h	9.010e+004	4.055e+004	1.802e+004	1.802e+004	7.216e+006	7.144e+006	9010	3.157e+006	3.126e+006	9010	
Mass Flow	kg/h	1.816e+005	1.297e+006	3.633e+004	3.633e+004	1.455e+007	1.440e+007	2.883e+005	1.010e+008	1.000e+008	2.883e+005	
Liquid Volume Flow	m3/h	2600	1140	520.0	520.0	2.083e+005	2.062e+005	253.4	8.880e+004	8.792e+004	253.4	
Heat Flow	kJ/h	1.928e+008	8.964e+007	5.279e+008	5.279e+008	2.114e+011	2.093e+011	2.938e+008	1.030e+011	1.019e+011	2.938e+008	

HYSYS – Turbine

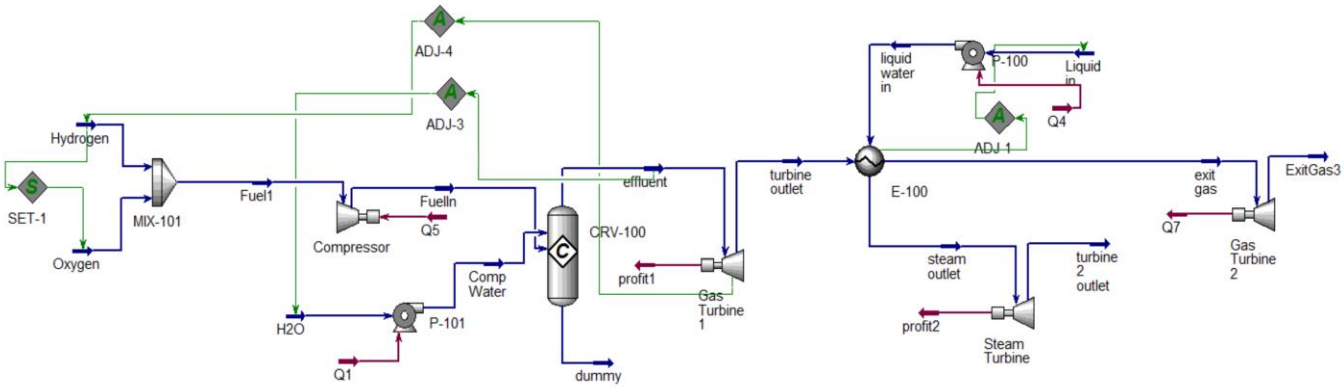

compressor		
Feed Pressure	4000	kPa
Product Pressure	6000	kPa
Molar Flow	2.713e+004	kgmole/h
Energy	1.220e+008	kJ/h
Power	33.90	MW

Gas Turbine 1		
Feed Pressure	6000	kPa
Product Pressure	300.0	kPa
Molar Flow	5.233e+004	kgmole/h
Energy	1.440e+009	kJ/h
Power	400.0	MW

Steam Turbine		
Feed Pressure	9117	kPa
Product Pressure	101.3	kPa
Molar Flow	1.945e+004	kgmole/h
Energy	2.613e+008	kJ/h
Power	72.58	MW

Gas Turbine 2		
Feed Pressure	300.0	kPa
Product Pressure	101.3	kPa
Molar Flow	5.233e+004	kgmole/h
Energy	2.628e+008	kJ/h
Power	73.00	MW

Energy Streams							
		profit1	profit2	Q1	Q5	Q7	Q4
Heat Flow	kJ/h	1.440e+009	2.613e+008	4.798e+006	1.220e+008	2.435e+008	4.155e+006

Compositions								
	Hydrogen	Oxygen	effluent	dummy	turbine outlet	exit gas	Comp Water	liquid water in
Comp Mole Frac (Methane)	0.0000	0.0000	0.0000	0.0000	0.0000	0.0000	0.0000	0.0000
Comp Mole Frac (Oxygen)	0.0000	1.0000	0.0000	0.0000	0.0000	0.0000	0.0000	0.0000
Comp Mole Frac (H2O)	0.0000	0.0000	1.0000	1.0000	1.0000	1.0000	1.0000	1.0000
Comp Mole Frac (CO2)	0.0000	0.0000	0.0000	0.0000	0.0000	0.0000	0.0000	0.0000
Comp Mole Frac (Nitrogen)	0.0000	0.0000	0.0000	0.0000	0.0000	0.0000	0.0000	0.0000
Comp Mole Frac (NO2)	0.0000	0.0000	0.0000	0.0000	0.0000	0.0000	0.0000	0.0000
Comp Mole Frac (NO)	0.0000	0.0000	0.0000	0.0000	0.0000	0.0000	0.0000	0.0000
Comp Mole Frac (Ethane)	0.0000	0.0000	0.0000	0.0000	0.0000	0.0000	0.0000	0.0000
Comp Mole Frac (Hydrogen)	1.0000	0.0000	0.0000	0.0000	0.0000	0.0000	0.0000	0.0000
	steam outlet	turbine 2 outlet	H2O	Fuel1	FuelIn	ExitGas3	Liquid in	
Comp Mole Frac (Methane)	0.0000	0.0000	0.0000	0.0000	0.0000	0.0000	0.0000	
Comp Mole Frac (Oxygen)	0.0000	0.0000	0.0000	0.3333	0.3333	0.0000	0.0000	
Comp Mole Frac (H2O)	1.0000	1.0000	1.0000	0.0000	0.0000	1.0000	1.0000	
Comp Mole Frac (CO2)	0.0000	0.0000	0.0000	0.0000	0.0000	0.0000	0.0000	
Comp Mole Frac (Nitrogen)	0.0000	0.0000	0.0000	0.0000	0.0000	0.0000	0.0000	
Comp Mole Frac (NO2)	0.0000	0.0000	0.0000	0.0000	0.0000	0.0000	0.0000	
Comp Mole Frac (NO)	0.0000	0.0000	0.0000	0.0000	0.0000	0.0000	0.0000	
Comp Mole Frac (Ethane)	0.0000	0.0000	0.0000	0.0000	0.0000	0.0000	0.0000	
Comp Mole Frac (Hydrogen)	0.0000	0.0000	0.0000	0.6667	0.6667	0.0000	0.0000	

Material Streams									
		Hydrogen	Oxygen	effluent	dummy	turbine outlet	exit gas	Comp Water	liquid water in
Vapour Fraction		1.0000	1.0000	1.0000	0.0000	1.0000	1.0000	0.0000	0.0000
Temperature	C	665.0	665.0	1603	1603	1038	501.0	20.34	20.00
Pressure	kPa	4000	4000	6000	6000	300.0	300.0	6000	9117
Molar Flow	kgmole/h	1.809e+004	9044	5.233e+004	0.0000	5.233e+004	5.233e+004	3.424e+004	1.945e+004
Mass Flow	kg/h	3.646e+004	2.894e+005	9.427e+005	0.0000	9.427e+005	9.427e+005	6.168e+005	3.504e+005
Liquid Volume Flow	m3/h	522.0	254.4	944.6	0.0000	944.6	944.6	618.1	351.1
Heat Flow	kJ/h	3.405e+008	1.861e+008	-9.151e+009	0.0000	-1.059e+010	-1.176e+010	-9.800e+009	-5.566e+009
		steam outlet	turbine 2 outlet	H2O	Fuel1	FuelIn	ExitGas3	Liquid in	
Vapour Fraction		1.0000	1.0000	0.0000	1.0000	1.0000	1.0000	0.0000	
Temperature	C	521.8	99.99	20.00	664.7	804.1	377.3	19.49	
Pressure	kPa	9117	101.3	101.3	4000	6000	101.3	101.3	
Molar Flow	kgmole/h	1.945e+004	1.945e+004	3.424e+004	2.713e+004	2.713e+004	5.233e+004	1.945e+004	
Mass Flow	kg/h	3.504e+005	3.504e+005	6.168e+005	3.259e+005	3.259e+005	9.427e+005	3.504e+005	
Liquid Volume Flow	m3/h	351.1	351.1	618.1	776.4	776.4	944.6	351.1	
Heat Flow	kJ/h	-4.394e+009	-4.655e+009	-9.805e+009	5.266e+008	6.486e+008	-1.201e+010	-5.570e+009	