Hydrogen Fired Turbine Power Plant

•••

Team 1.2
Claire Niemet, Katie Trese, Reed J Sattizahn

Natural Gas: The Future?

- Electricity production accounts for 25% of US greenhouse gas emissions[1]
- Main source of electricity is from petroleum (37%)[2]
- Natural gas emits 52% less CO_2 than coal, 31% less than petroleum[3]
- Natural gas just a temporary fix
  - Still attributes 33% of energy-related carbon emissions[2]
  - Mostly obtained by hydraulic fracturing (fracking)[3]
- Conventional renewable energy is expensive and/or intermittent

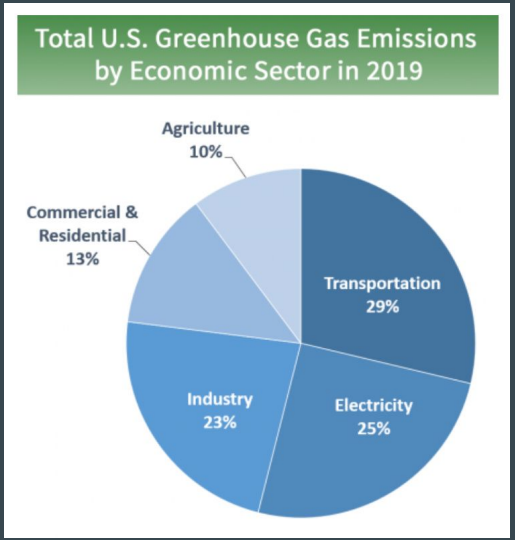

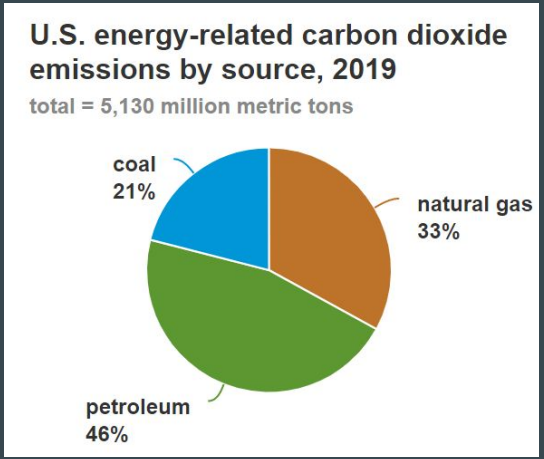

Hydrogen: The Next Step in Green Energy

- Most abundant element, can be generated locally

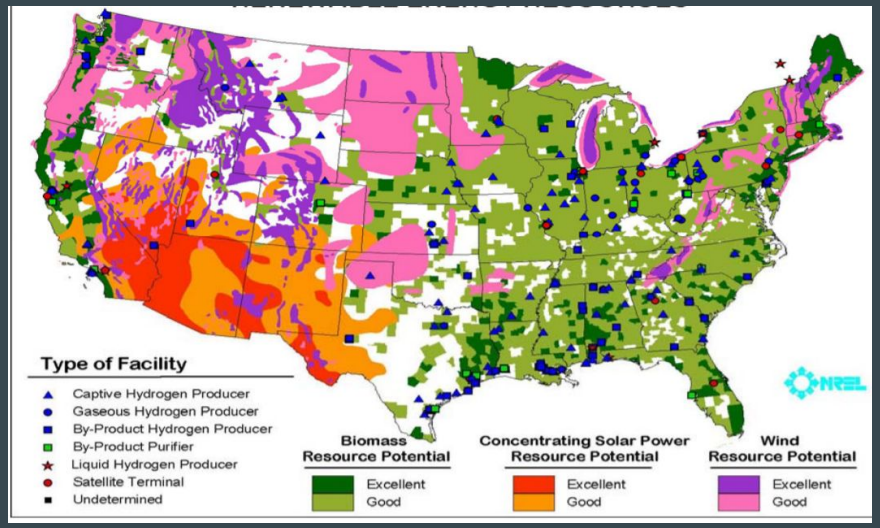

Hydrogen facilities and renewable energy resources in the U.S. [4]

- No carbon-based emissions
- More heat released

$$CH_4 + 2O_2 \rightarrow CO_2 + 2H_2O$$

$$\triangle H = 74.8 \text{ kJ}$$

$$2H_2 + O_2 \rightarrow 2H_2O,$$

$$\triangle H = 120.9 \text{ kJ}$$

- Con: NOx formation

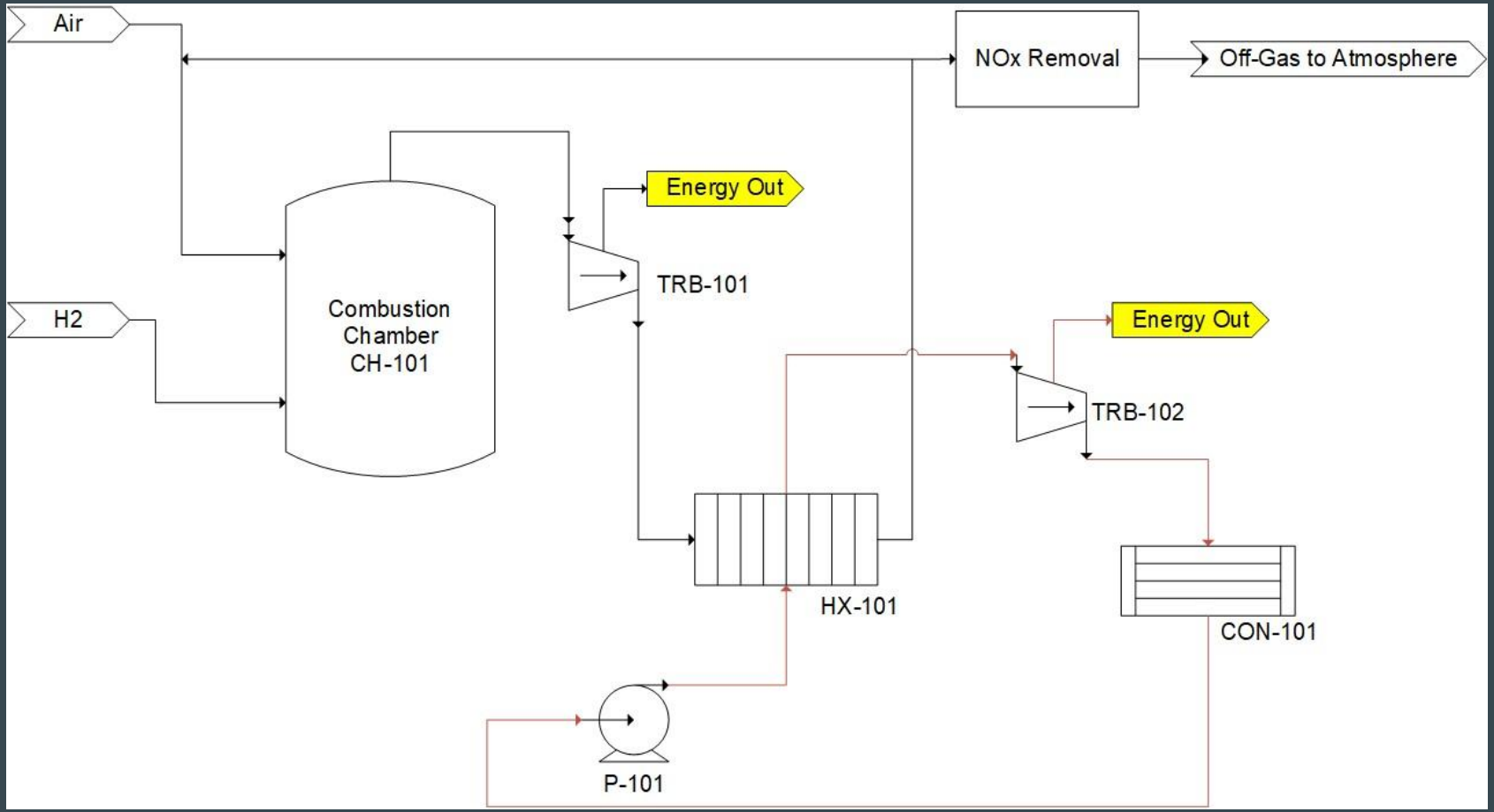

Process flow diagram (PFD) of combustion system. Maroon streams represent the water/steam streams of the bottoming cycle. Turbine 101 (TRB-101) is the primary turbine. Excess heat in exhaust is used to produce high pressure steam in the bottom cycle (HX-101). The bottoming cycle increases plant efficiency by ~10% and provides a source of heat for the plant. NOx removal system scrubs effluent before release to atmosphere and exhaust gas recycle (EGR) decreases amount of NOx produced in the process.

Process Methods and Unique Challenges

- Bottoming cycle to boost efficiency
- NOx prevention: exhaust recycle
- NOx removal system
- Liquid hydrogen storage on-site presents unique safety hazards that must be mitigated

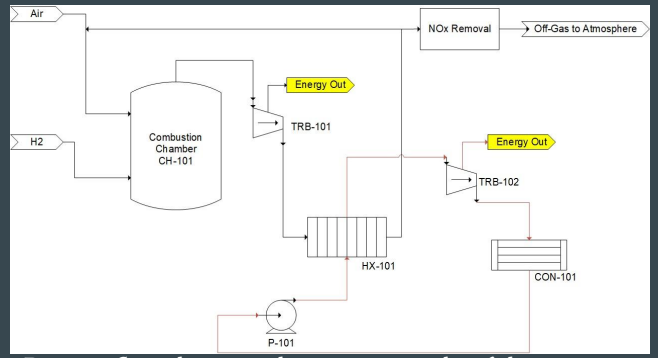

Process flow diagram shown previously of the combustion and bottoming cycles

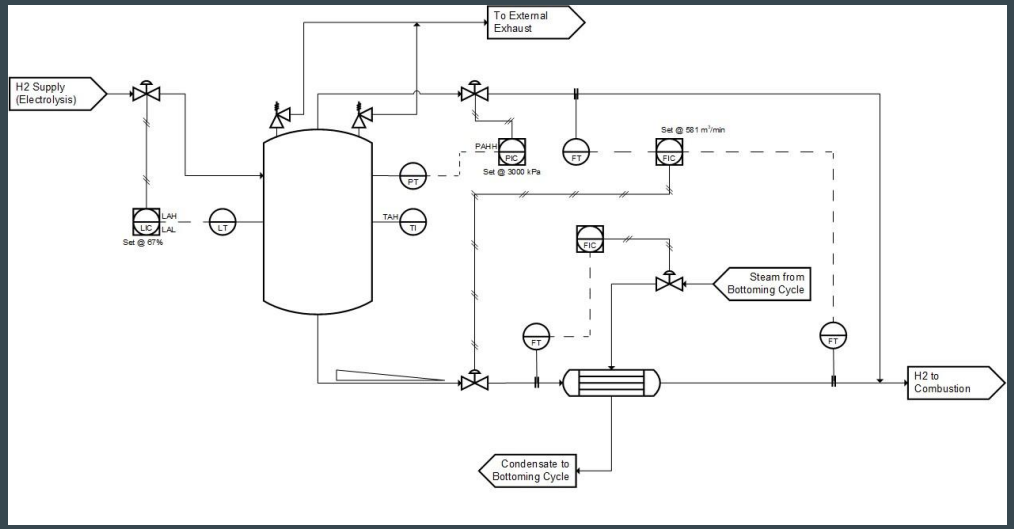

P&ID of hydrogen storage and supply system

Thank you!

References

1) Environmental Protection Agency. (2021, April 14). *Sources of Greenhouse Gas Emissions*. EPA. https://www.epa.gov/ghgemissions/sources-greenhouse-gas-emissions.
2) *U.S. Energy Information Administration - EIA - Independent Statistics and Analysis*. Where greenhouse gases come from - U.S. Energy Information Administration (EIA). (n.d.). https://www.eia.gov/energyexplained/energy-and-the-environment/where-greenhouse-gases-come-from.php#:~:text=In%202019%2C%20the%20electric%20power,electric%20power%20sector%20CO2%20emissions.
3) *U.S. Energy Information Administration - EIA - Independent Statistics and Analysis*. Natural gas explained - U.S. Energy Information Administration (EIA). (n.d.). https://www.eia.gov/energyexplained/natural-gas/#:~:text=In%20conventional%20natural%20gas%20deposits,a%20well%20under%20high%20pressure.
4) A. Herzog, and M. Tatsutani, "A Hydrogen Future? An Economic and Environmental Assessment of Hydrogen Production Pathways", *National Resources Defense Council,* Nov. 2005